Paulmann

Safety Instructions

0, 1, 4, 6, 7, 8, 11, 15, 16, 17, 19, 22

Info Hotline +49 (0) 5041 998 389
Mon. - Do. 7^{00} - 20^{00}
Fr. 7^{00} - 17^{00}

Paulmann Licht GmbH
31832 Springe / Germany
www.paulmann.com
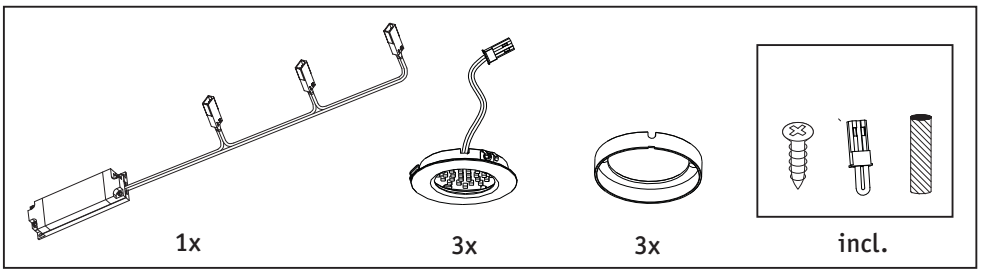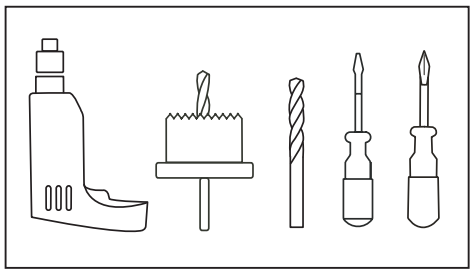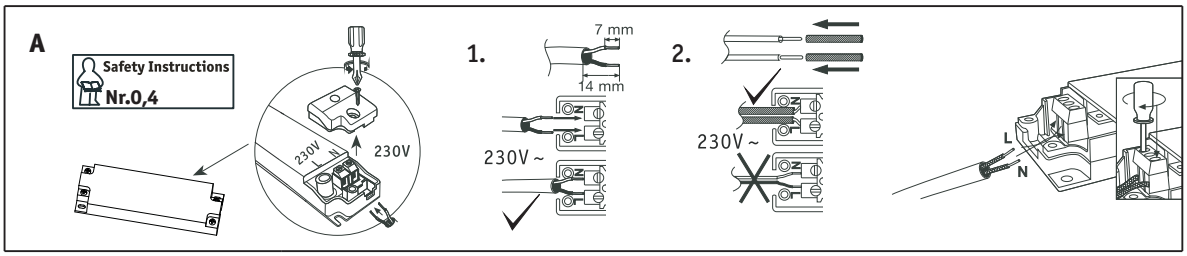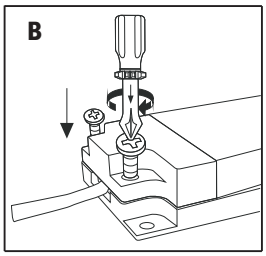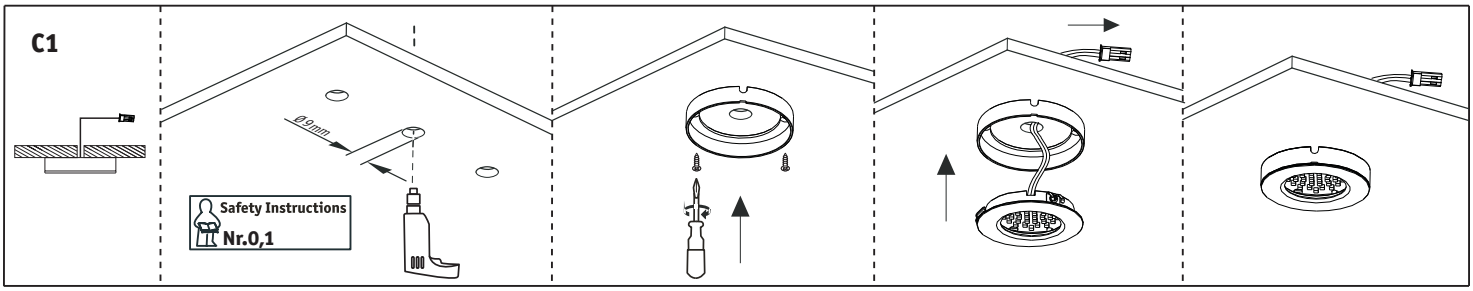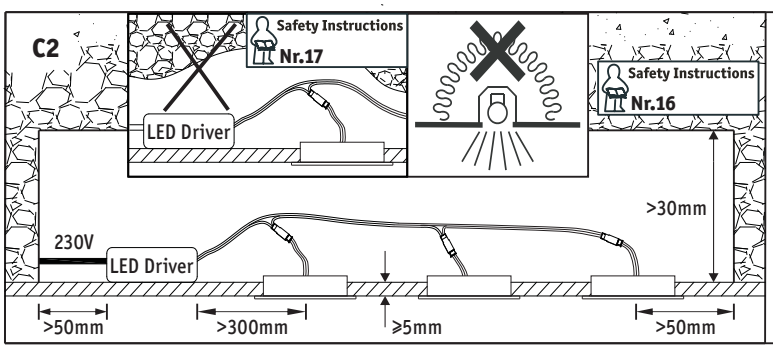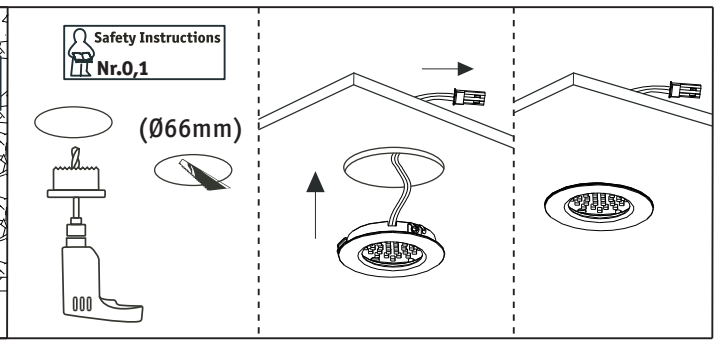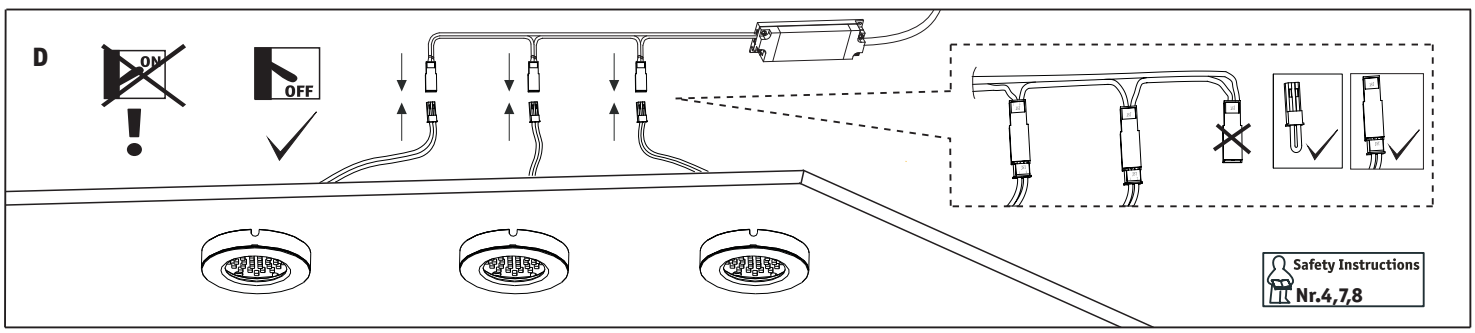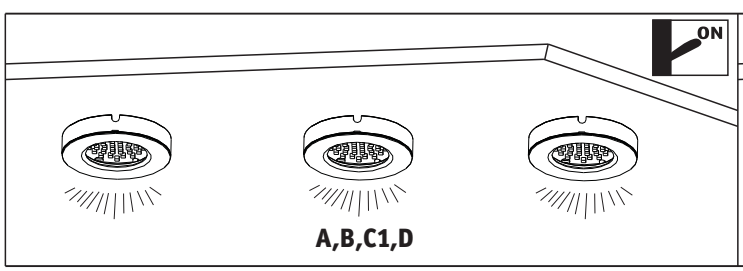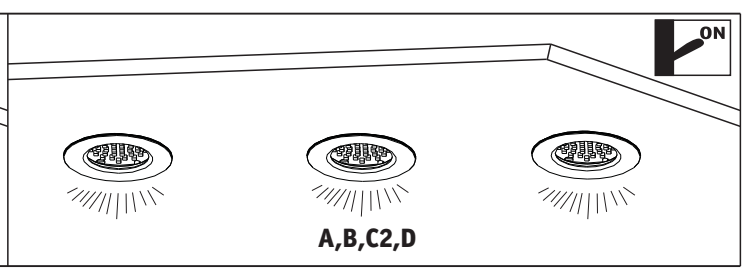
Art.-Nr.:
935.47
(+MA 173)
PKE 10/12 CE