Paulmann

Safety Instructions

0,1,4,6,7,8,9,11,15,
23,26,27

Info Hotline
+49 (0) 5041 998 389
Mon.-Do. 7⁰⁰-20⁰⁰
Fr. 7⁰⁰-17⁰⁰

Paulmann Licht GmbH
31832 Springe / Germany
www.paulmann.com

Art.-Nr.:
951.14

(+MA 173)

PH 10/11

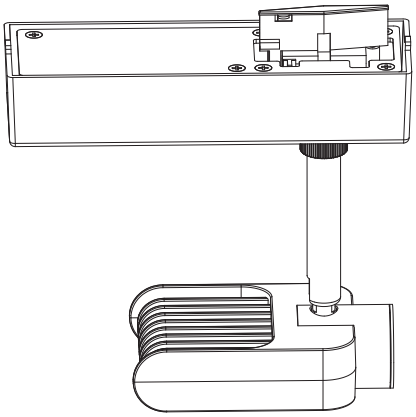

A

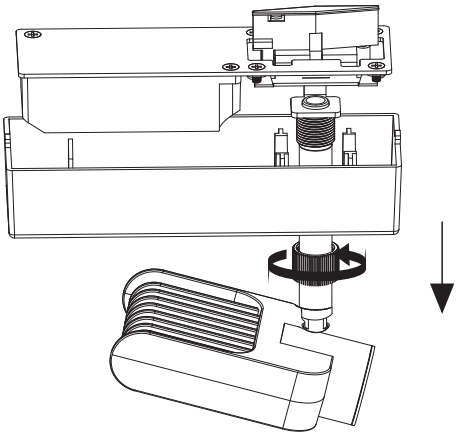

B

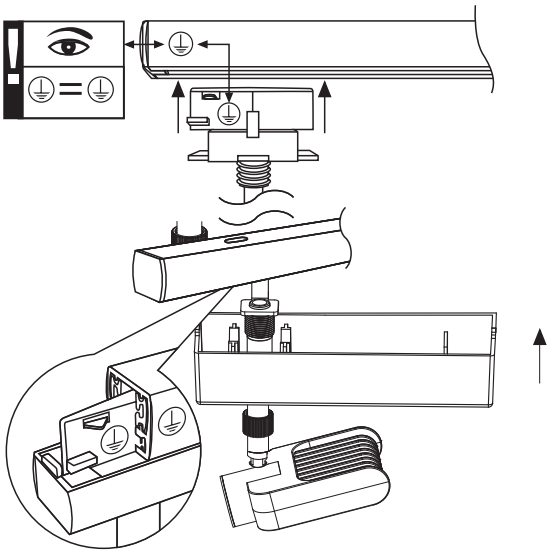

Safety Instructions
Nr.0

C

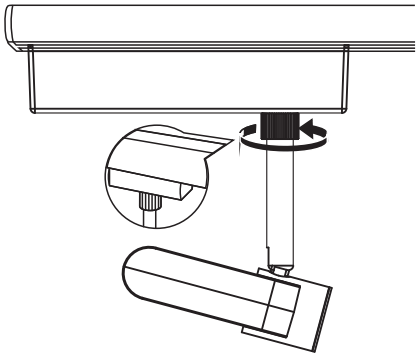

Safety Instructions
Nr.0.4

D

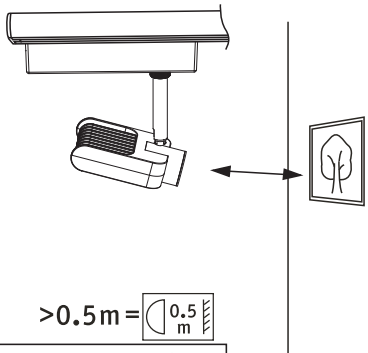
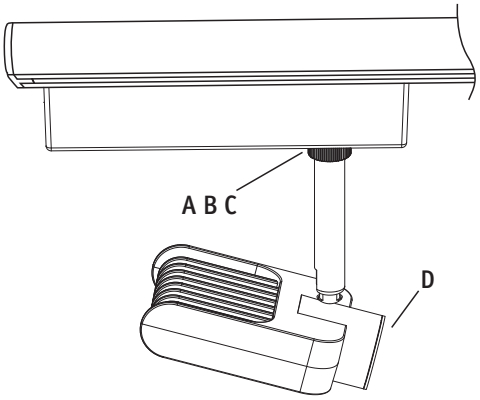
Safety Instructions
Nr.0.9