Paulmann

Safety Instructions

0, 1, 3, 5a, 6, 7, 8, 9, 11, 13, 14, 15, 16, 17, 18, 19, 20, 21, 22, 23, 24

Info Hotline
+49 (0) 5041 998 389
Mon. - Do. 7⁰⁰ - 20⁰⁰
Fr. 7⁰⁰ - 17⁰⁰

Paulmann Licht GmbH
31832 Springe / Germany
www.paulmann.com

Art.-Nr.:
98902

(+MA 173)
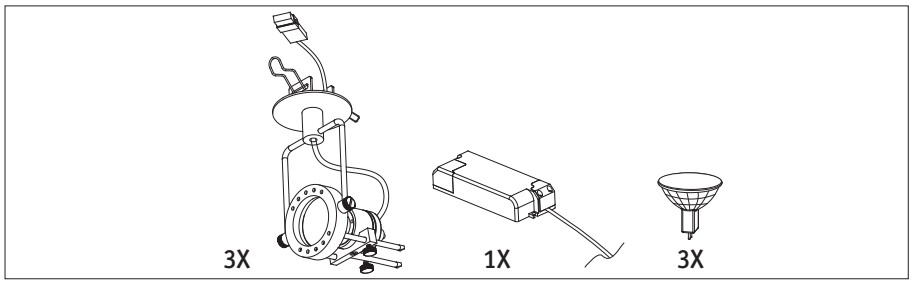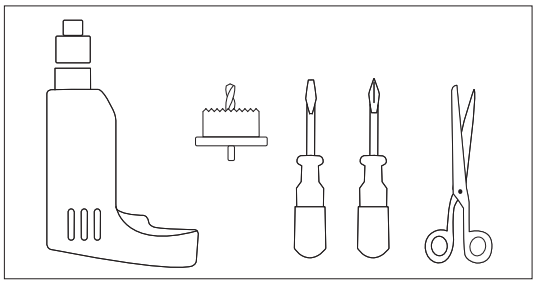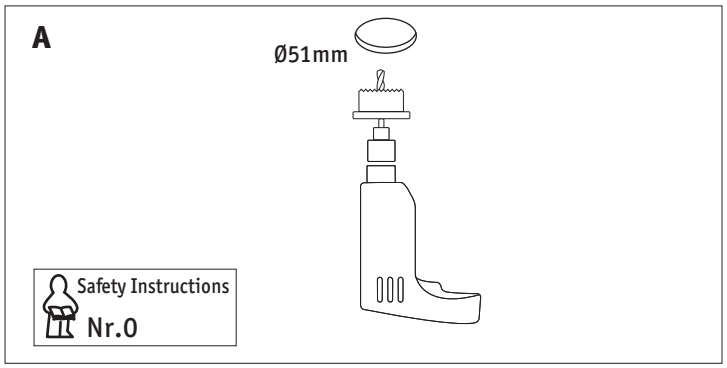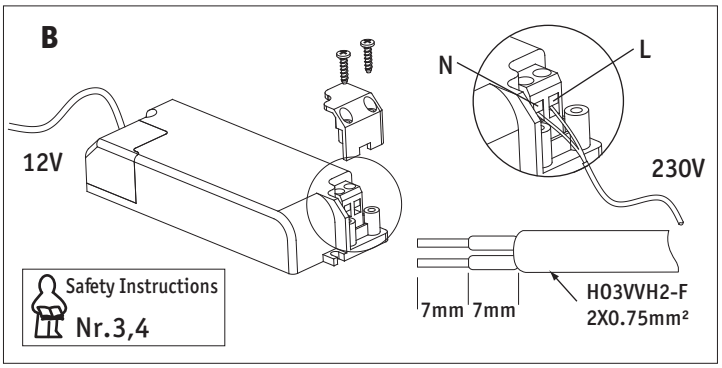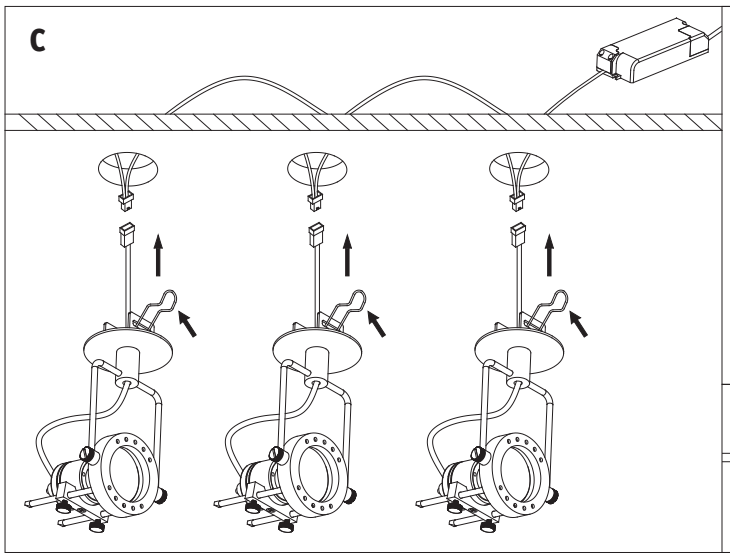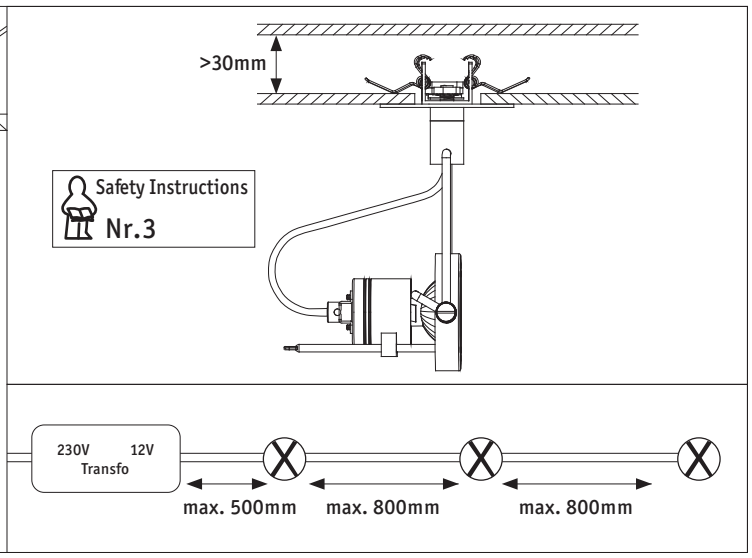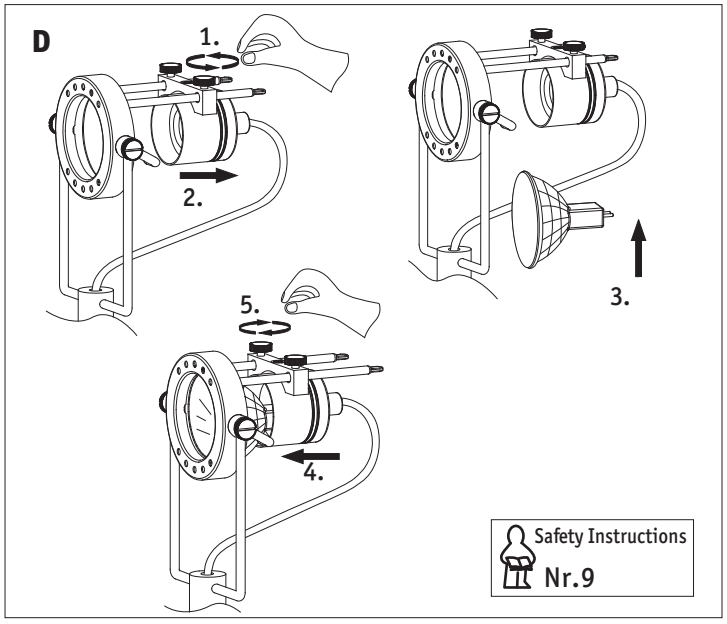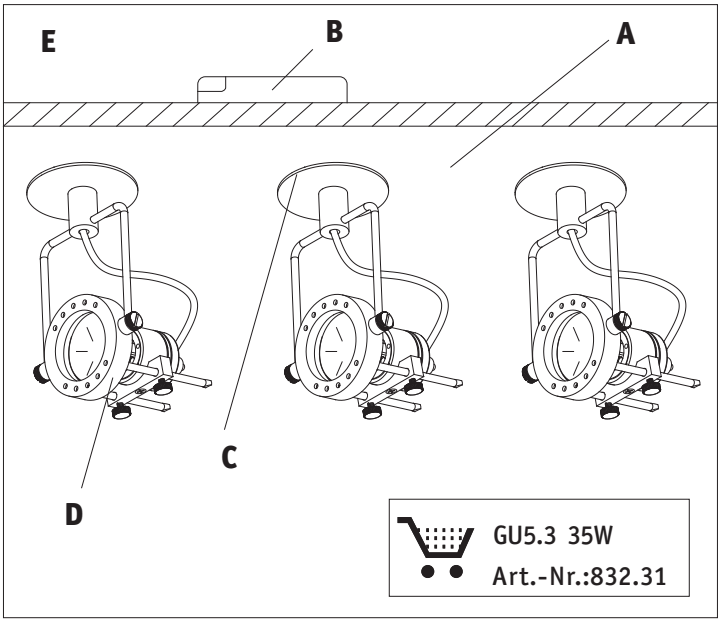
PEA 09/09